I www.3ds.com I © Dassault Systèmes I Confidential Information I 6/16/2012 ref.: 20110523MKT015 I

3DVIA Composer

Introduction

3dvia

I www.3ds.com I © Dassault Systèmes I Confidential Information I 6/16/2012 ref.: 20110523MKT015 I

“The two words “information” and “communication” are often used interchangeably, but they signify quite different things. Information is giving out; communication is getting through.”

--Sidney J. Harris

When Communication Breaks Down…

I www.3ds.com I © Dassault Systèmes I Confidential Information I 6/16/2012 ref.: 20110523MKT015 I

Management

- Delays in bringing products to market
- Difficulty differentiating products from competitive offerings

Engineering

- Time wasted supporting non-engineering tasks
- Difficulty explaining complex information with non-engineers

Manufacturing

- Difficulty understanding complex assembly instructions
- High costs of errors from inadequate training and execution

Documentation

- Reliance on engineering to provide detailed product views
- Time wasted reworking outdated technical illustrations

Sales & Marketing

- Differentiating against competitive product offerings
- High cost of creating product illustrations

Training

- Difficulty creating understandable instructions to non-engineers
- Localization costs of training material

3dvia

I www.3ds.com I © Dassault Systèmes I Confidential Information I 6/16/2012 ref.: 20110523MKT015 I

DASSAULT SYSTEMES

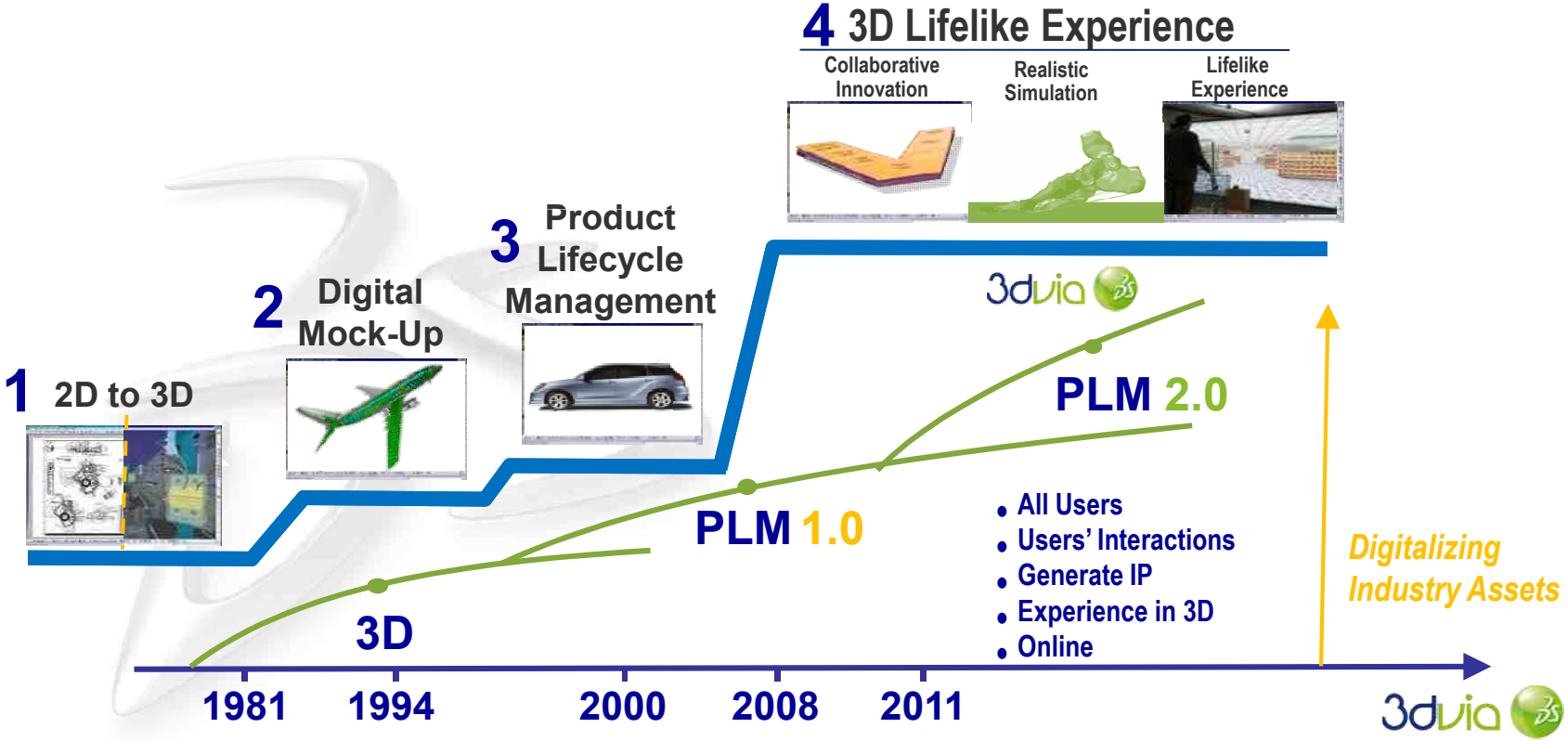

3DVIA: For A Life-Like Experience

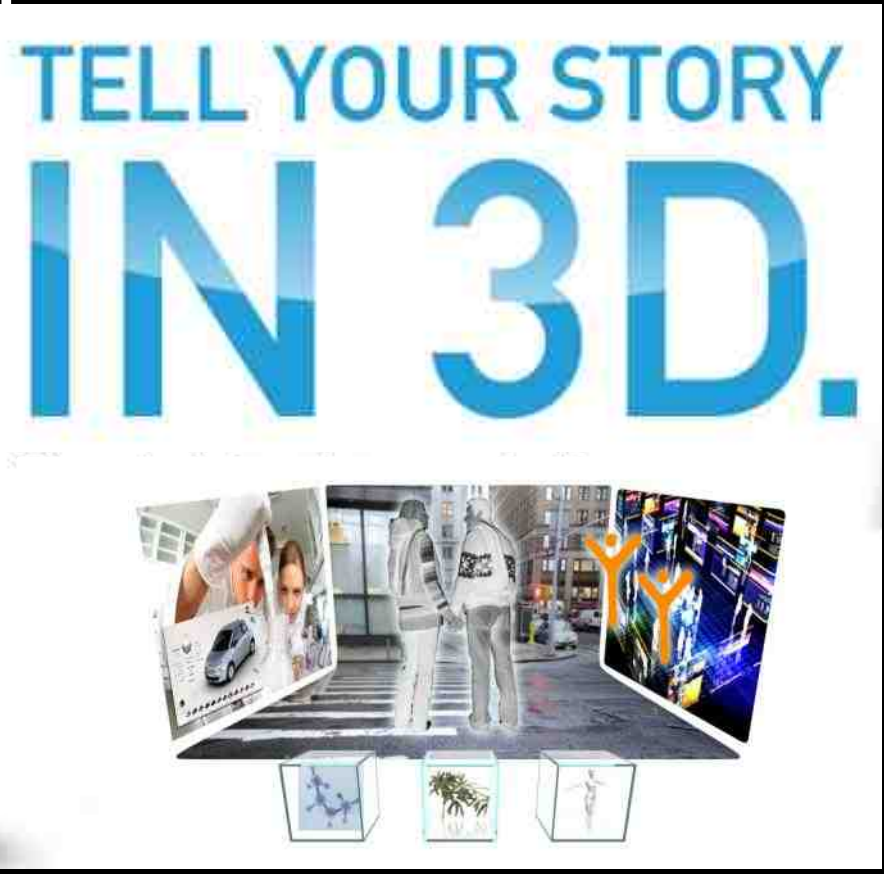

3dvia

Sharing Technical Information

The Traditional Way

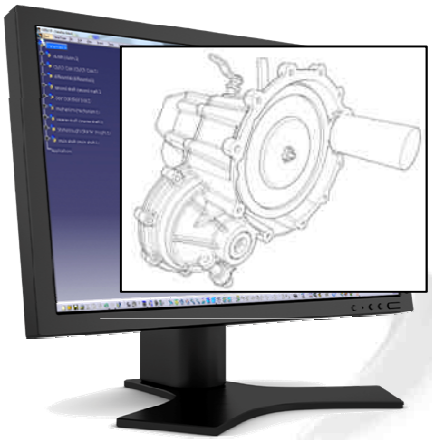

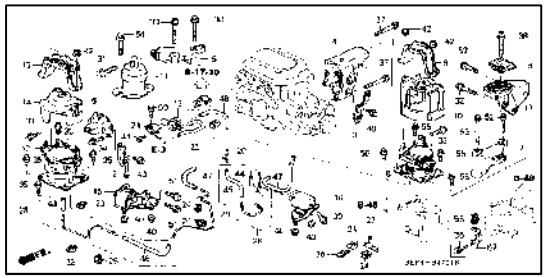

Upstream Processes

Midstream & Downstream Processes

Redo

Release

I www.3ds.com I © Dassault Systèmes I Confidential Information I 6/16/2012 ref.: 20110523MKT015 I

Sharing Technical Information

Faster Processes With 3D

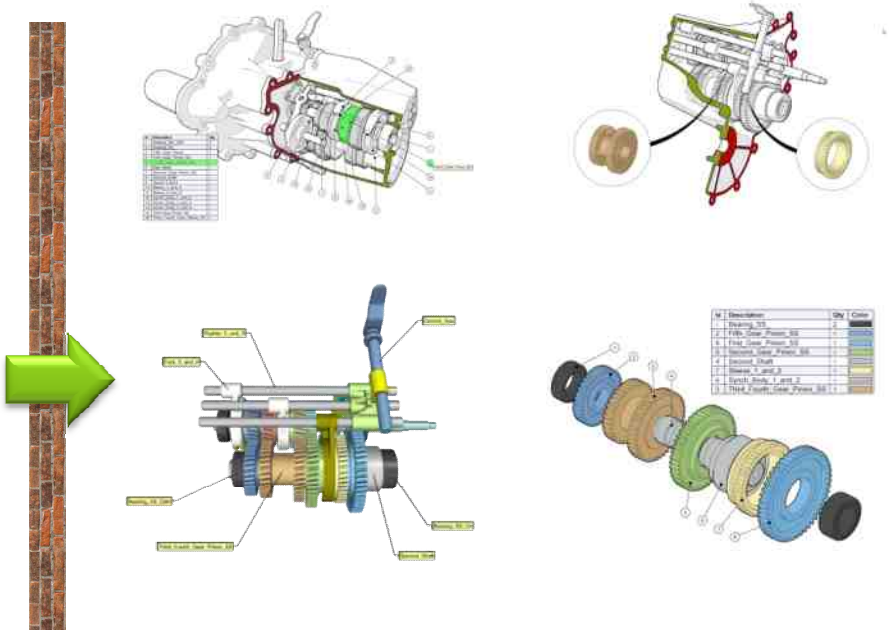

Upstream Processes

Savings (ROI)

Release

Release

| www.3ds.com | © Dassault Systèmes | Confidential Information | 6/16/2012 - ref.: 20110523MKT015 |

Sharing Technical Information

Enhanced Communication With 3D

Improve operational efficiencies

Enhance product quality

Shorten time to market

Win more business

Lyuvu 3dv.com | © Dassault Systèmes | Confidential Information | 6/16/2012 - ref: 20110523MKT015 |

What is 3DVIA Composer?

I www.3ds.com I © Dassault Systèmes I Confidential Information I 6/16/2012 ref.: 20110523MKT015 I

3DVIA Composer helps organizations to more effectively *communicate product information.*

Improve Your 2D Deliverables

- Generate 2D content directly from 3D designs
  - Eliminate reliance on engineering to produce content
  - Quickly and easily create interactive vector graphics and high resolution images

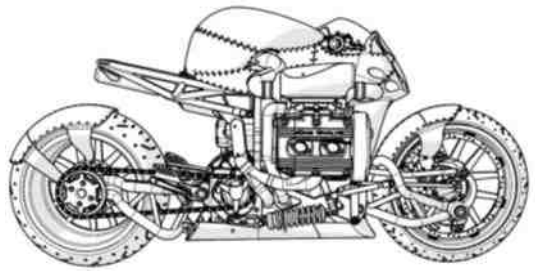

Communicate your ideas through the visual display of information

I www.3ds.com I © Dassault Systèmes I Confidential Information I 6/16/2012 ref.: 20110523MKT015 I

Technical Illustrations and Publications

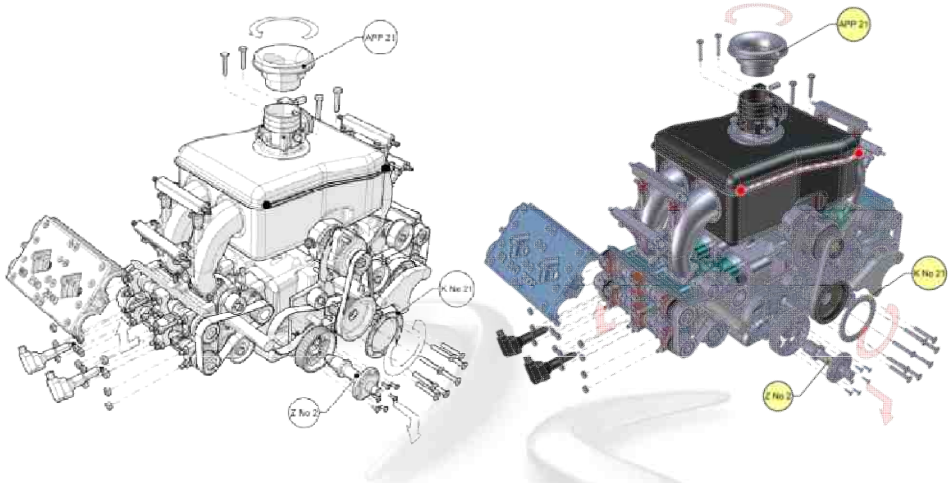

"3DVIA Composer helped reduce the time required to prepare technical documentation by 50%."

S.V. Savikhin
Deputy Chief of Perspective Technologies
JSC 'TYAZHMASH'

- Leverage existing CAD data
- Create high quality vector and raster images
- Eliminate the "tax" on engineering
- Initiate documentation during the design phase
- Keep illustrations up-to-date automatically

I www.3ds.com I © Dassault Systèmes I Confidential Information I 6/16/2012 ref.: 20110523MKT015 I

Extend the Value of 3D Data

- Repurpose your existing 3D designs
  - Access, enrich, and link 3D data sets
  - Remove ambiguities from interpreting 2D data and deliverables
  - Lighten 3D data for efficient sharing
  - Securely deliver 3D authored content across relevant platforms

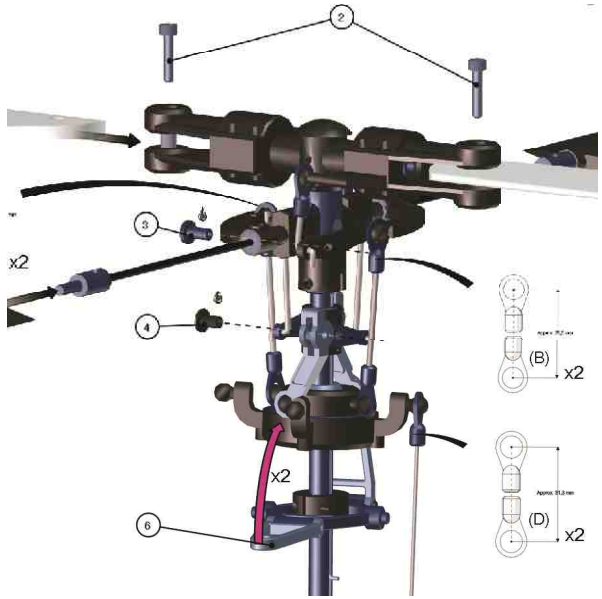

"The more you see, the more you know."
Aldous Huxley

I www.3ds.com I © Dassault Systèmes I Confidential Information I 6/16/2012 ref.: 20110523MKT015 I

Maximum Design Power & Communication

Two industry leading solutions are now available in a convenient bundled offering!

=

A perfect harmony for exceptional engineering communications

I www.3ds.com I © Dassault Systèmes I Confidential Information I 6/16/2012 ref.: 20110523MKT015 I

Superior Engineering Communications

Be the Hero!

- Create exciting experiences that make designs stand out
- Effectively engage stakeholders and demonstrate the value of your designs
- Easily share 3D designs outside engineering in a non-CAD format
- Reduce the frequent exchanges required to satisfy product documentation needs
- Ensure your designs remain secure
- Update content automatically to communicate design changes

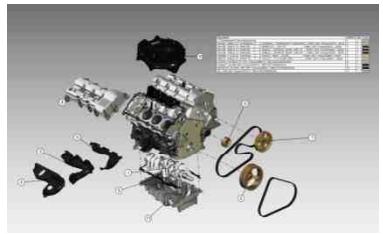

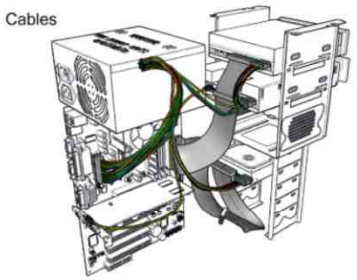

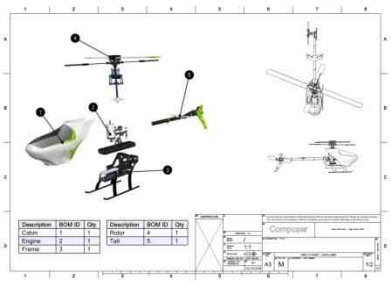

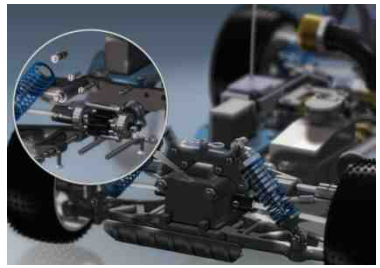

I www.3ds.com I © Dassault Systèmes I Confidential Information I 6/16/2012 ref.: 20110523MKT015 I

Service and Assembly Instructions

I www.3ds.com I © Dassault Systèmes I Confidential Information I 6/16/2012 ref.: 20110523MKT015 I

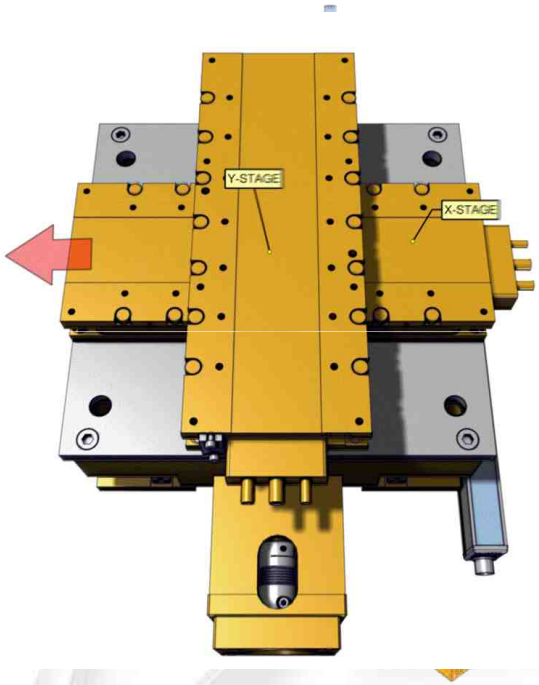

Evolve your 2D images… into rich 3D experiences

- Replace 2D drawings with 3D interactive instructions
- Reduce reliance on text-based material
- Reduce localization costs
- Deliver instructions directly to the shop floor
- Improve first-time right manufacturing

"3DVIA Composer has freed up 15% of our engineers time for higher-value tasks and allowed us to reduce drawings by 85%."

Jernail Hothi
Engineer, Instrument Assembly
Beckman Coulter

Sales and Marketing

- Create high quality 3D and 2D applications directly from product designs
- More clearly communicate technical product details
- Easily create immersive 3D animations
- Provide interactive product configurators
- Deploy content across electronic and print formats

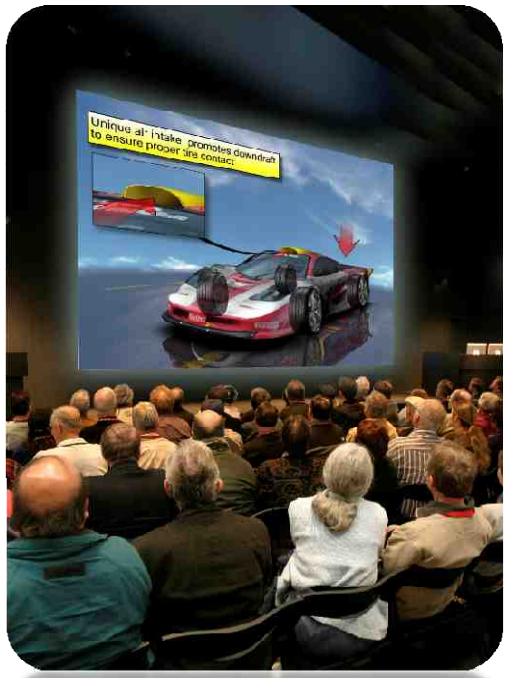

"Without 3DVIA Composer and this animation, it would have been very hard for us to win this €700,000 contract."

Zeki Sariçam
General Manager, ZESAR

I www.3ds.com I © Dassault Systèmes I Confidential Information I 6/16/2012 ref.: 20110523MKT015 I

What is 3DVIA Composer?

Technical Illustrations

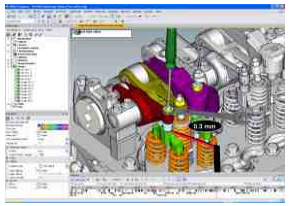

Service and Training Instructions

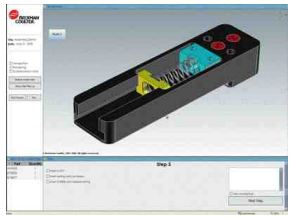

Assembly Instructions

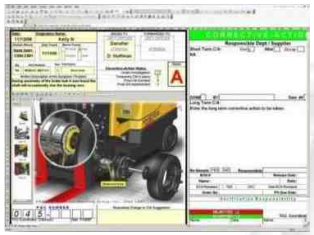

Project Review

Sales & Marketing

Online Catalogs

3dvia composer

"Explain Your Products"

3D Technical Communication software

That lets you
Clearly explain your products

Using your
Existing CAD data

I www.3ds.com I © Dassault Systèmes I Confidential Information I 6/16/2012 ref.: 20110523MKT015 I

Achieve Higher Value from Your PLM Investment

A Natural Extension to Your Engineering Workflow

1. Securely share design information across platforms
2. Clearly communicate design intent
3. Unify stakeholders during the define phase
4. Drive consensus with enhanced experiences

I www.3ds.com I © Dassault Systèmes I Confidential Information I 6/16/2012 ref.: 20110523MKT015 I

Strategies for Leveraging 3D Outside Engineering

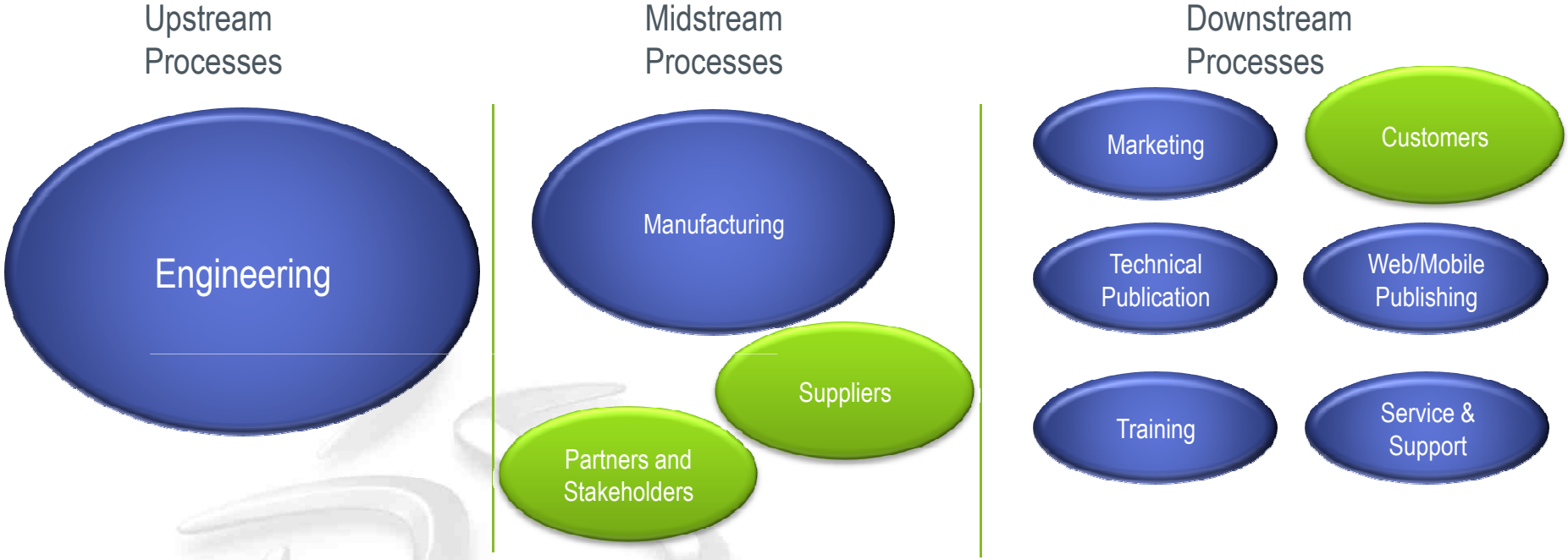

1. Improve project feedback from partners and stakeholders
2. Optimize manufacturing processes
3. Produce more compelling sales and marketing presentations
4. Validate designs and engage customers
5. Streamline technical illustrations and documentation
6. Deliver more effective training, service, and support

I www.3ds.com I © Dassault Systèmes I Confidential Information I 6/16/2012 ref.: 20110523MKT015 I

Holistic Business Improvement

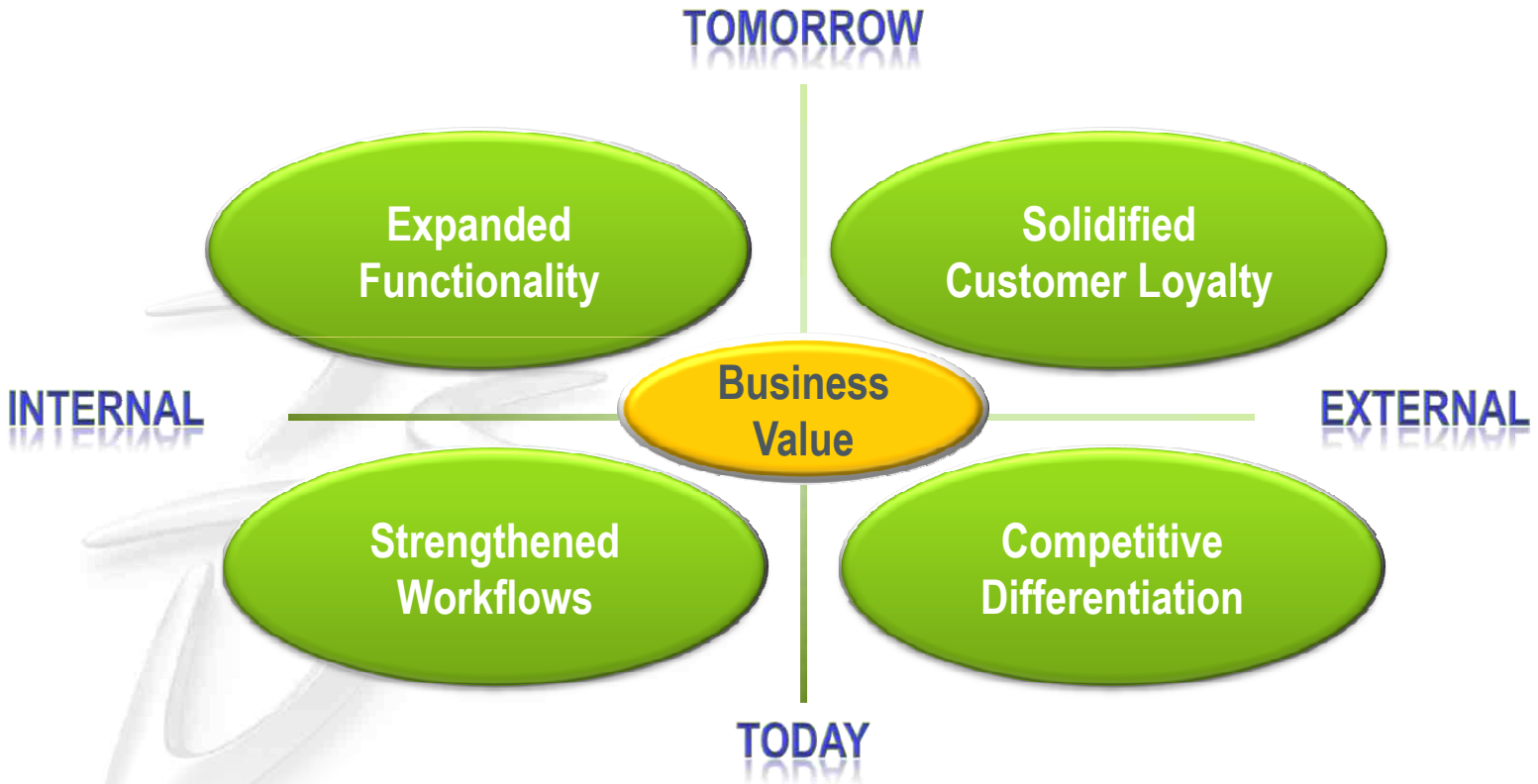

I www.3ds.com I © Dassault Systèmes I Confidential Information I 6/16/2012 ref.: 20110523MKT015 I

I www.3ds.com I © Dassault Systèmes I Confidential Information I 6/16/2012 ref.: 20110523MKT015 I